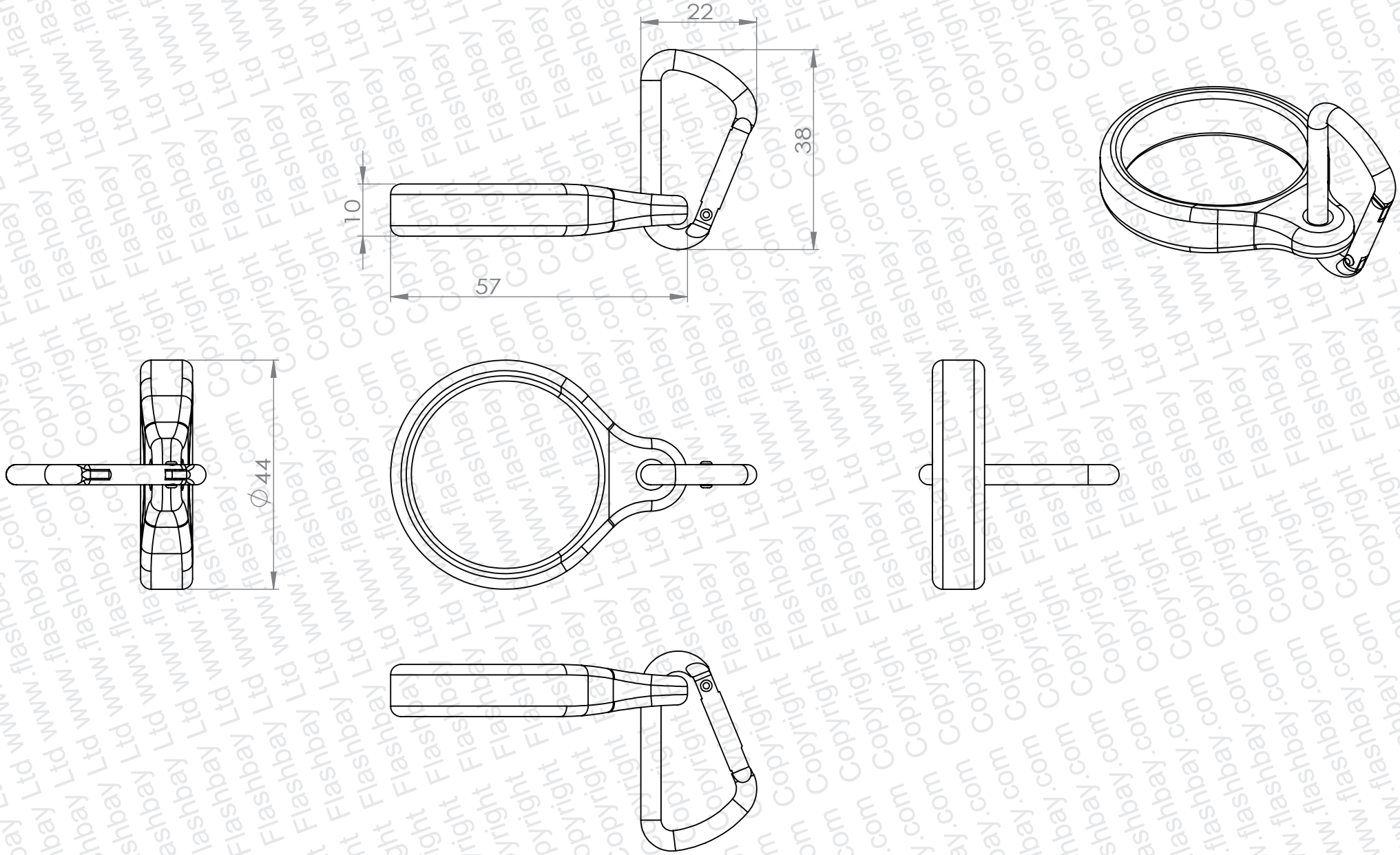

	PRODUCT	CODE	DIMENSIONS	SCALE
	Collar & Carabiner	LC	mm	1:1

flashbay®

Copyright Flashbay Ltd www.flashbay.com